PORTMAN

PG926 / PG1500

Glass Door Clamps

FITTING INSTRUCTIONS

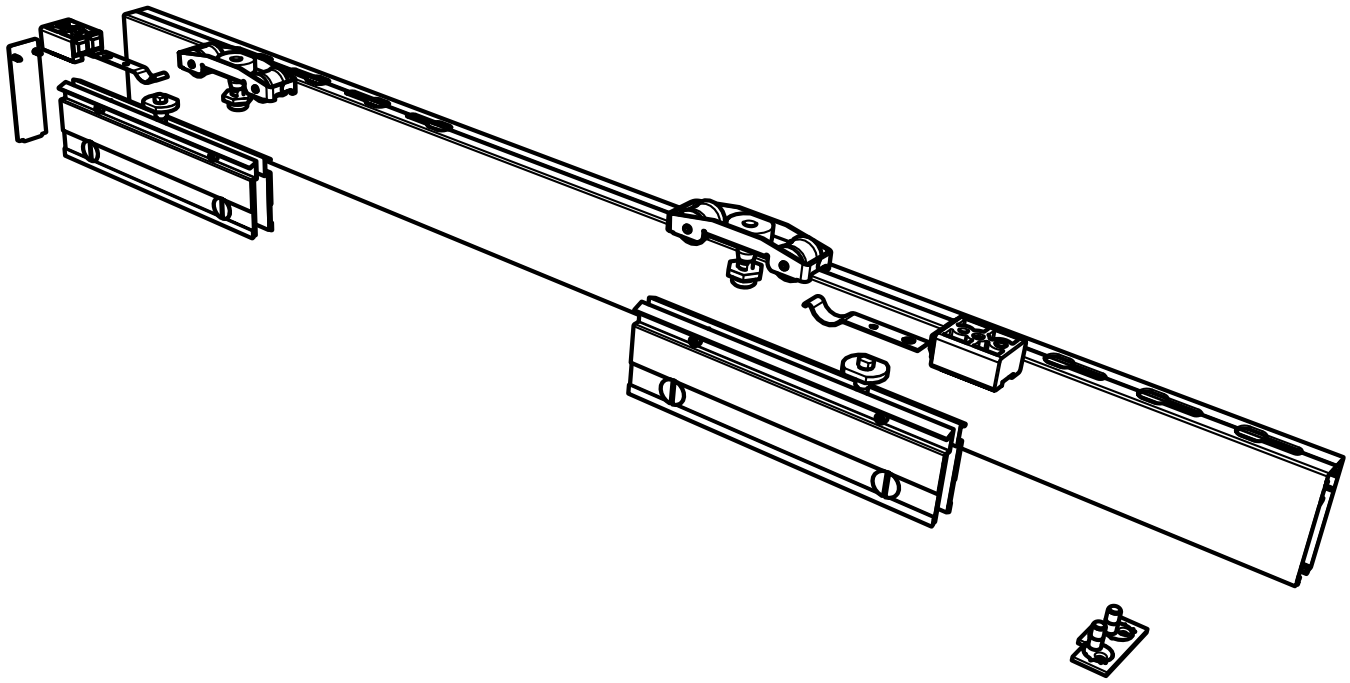

(Image for reference only)

COMPONENTS			
• ALUMINIUM VALANCE	1	• FIXING PACK	1
• CLAMP PLATE	4		
• CLAMP PAD	12		
• FLOOR GUIDE	1		
• END STOPS AND SPRINGS	2		
• TROLLEY ASSEMBLY	2		

SLIDING MECHANISM COMPONENTS

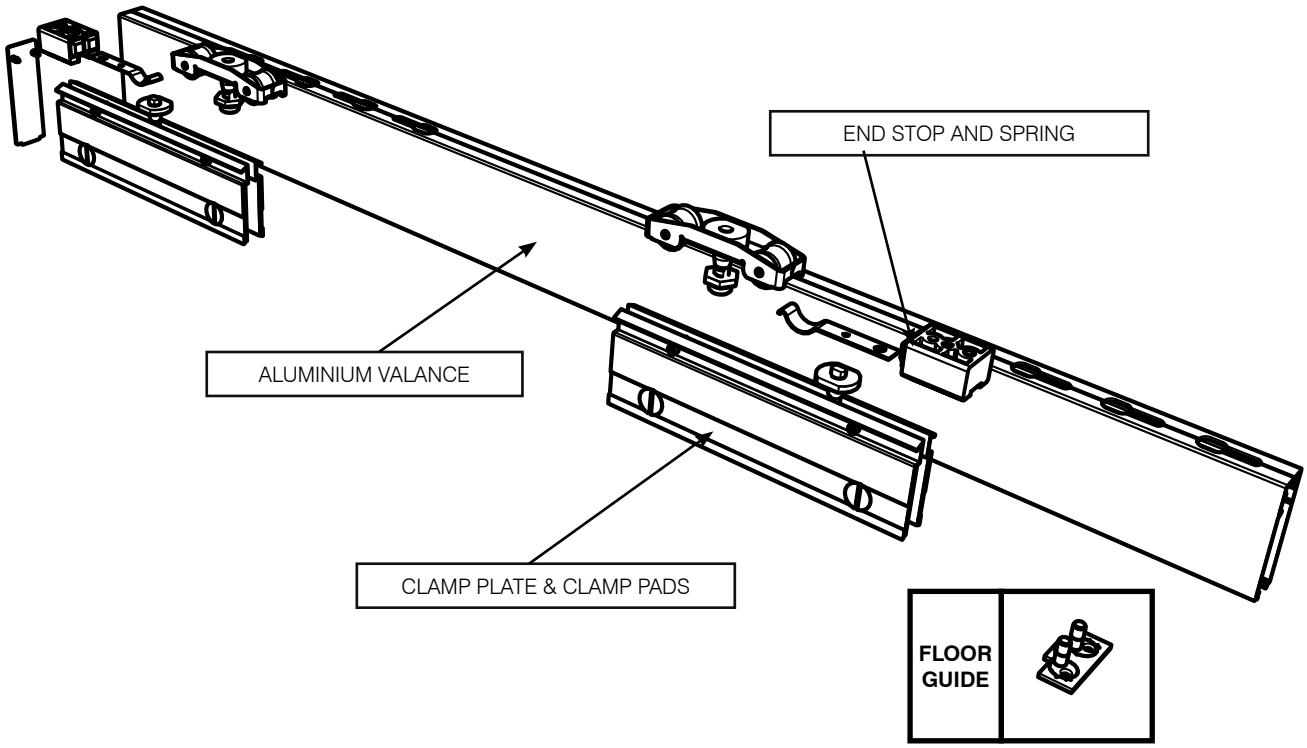

FIXING PACK

x 1	x 1	x 2	x 2	x 2
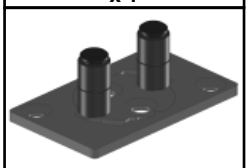				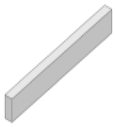
FLOOR GUIDE	T8 TORX BIT	CLAMP NUT	CLAMP BOLT	LOCK STRIP

x 2	x 4	x 4	X 1	x 4
Locking Nut	M8 FEMALE BOLT	M3 x 14 Socket Head	END CAP	M3 Locking Nut

x 2	x 4	x 4	x 4	x 2
	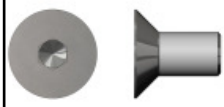			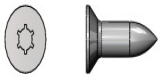
Trolley Bolt	M8 x 14 Hex Bolt	Glass Bush 8mm	Glass Bush 12mm	No.4 x Torx Screw

x 1	x 1
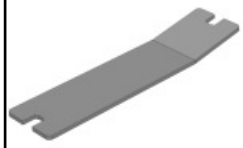	
Spanner	Large Spanner

1. GLASS CLAMP ASSEMBLY

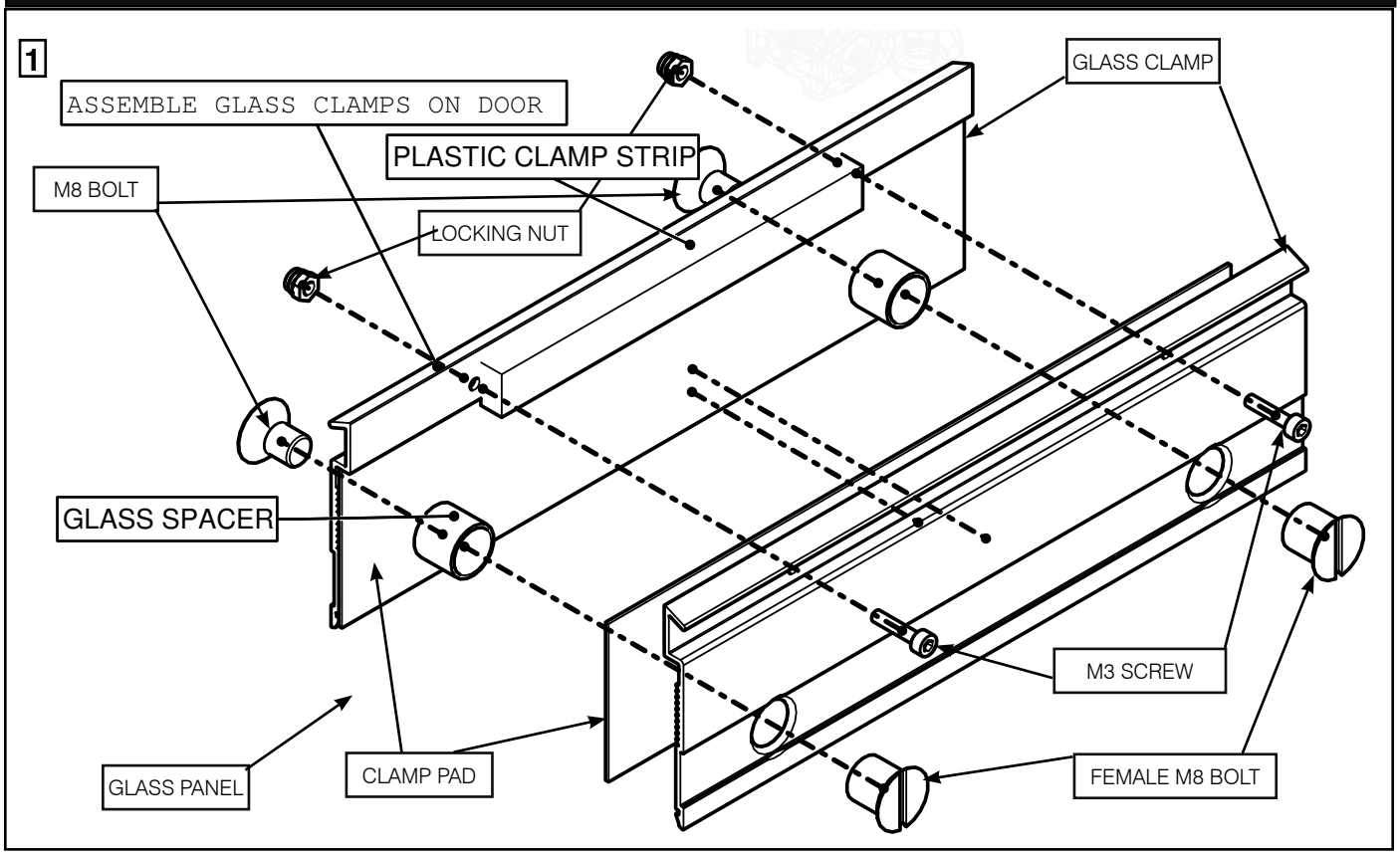

ENSURE YOUR GLASS IS DRILLED EXACTLY TO ROYDE AND TUCKER DRILLING SPECIFICATIONS FOR THIS KIT - DRILLING DETAIL ON FINAL PAGE OF DOCUMENT

Install the glass clamp assembly onto the upper side of the glass panel, as pictured above.

Ensure you use the correct fixings and number of glass seals for your glass thickness

- 8mm - Clamp Pad x 6
  Glass Bush 8mm Wide x 2

- 10mm - Clamp Pad x 4
  Glass Bush 8mm Wide x 2

- 12mm - Clamp Pad x 2
  Glass Bush 12mm Wide x 2

Ensure the glass bush is installed then losely tighten the M8 Bolt into the Female M8 Bolt

Losely tighten M3 Screw into the Locking Nut

Now tighten the M8 Bolt followed by the M3 Screw. To ensure the M3 Screw is not over tightend as this will cause the top of the Glass Clamp to curve inwards and effect operation, insert plastic clamp strip

Repeat this procedure to install the other clamp assembly

2. CUTTING THE VALANCE

To calculate **valence length** width and **cutting positions** from known **door dimensions:**

Standard Itermediate and Wide Valence length (Vl)= Door width + 2mm

Standard Width Cutting Position (Vc) = (929 - Vl) / 2

Intermediate and Wide Cutting Position (Vc) = (1503 - Vl) / 2

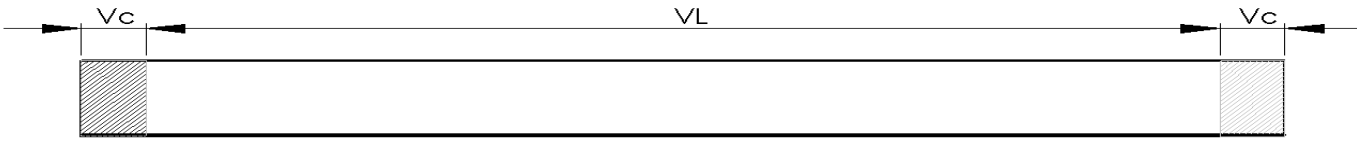

1. The Aluminum Valance must be cut to match the length of door chosen. Valance should be cut in accordance with calculations relating to door widths and figure above. It is important the cuts are made square and should be done with a chop or mitre saw or similar.

2. Inset Clamp nut into top of aluminum valance and slide along to the first key hole slot. Insert clamp bolt through key hole and thread into clamp nut to locate - do not tighten at this stage

3. Slide Auminum valance over both glass clamps to check fit and ensure clamps have not been ovetightened and distorted.

4. Ensure the Clamp Nut and Bolt are above the plastic glass clamp insert and tighten to locate glass centrally in the Valance.

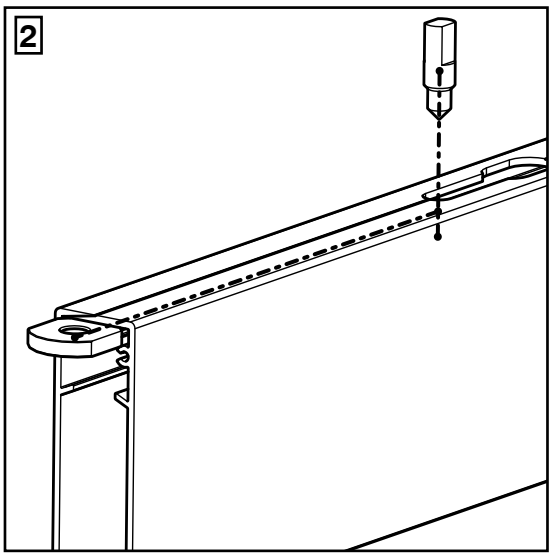

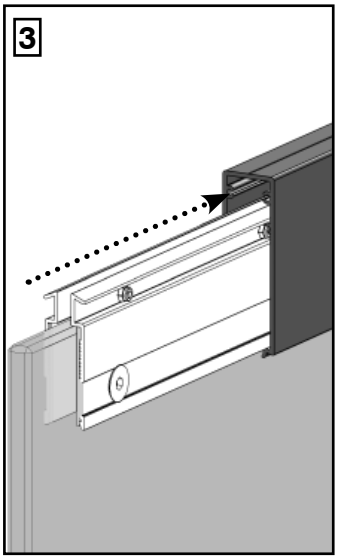

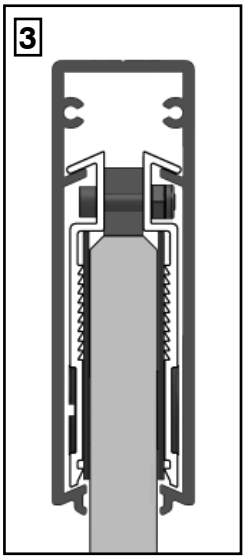

3. DOOR GUIDE

1. Configure the door guide according to to your glass width as shown in illustrations below.

2. Pilot drill the holes in preperation for screwing.

3. Fix the door guide in place using suitable countersunk screws **(not provided)** to complete the installation.

Door Guide Configuration:

8mm Glass

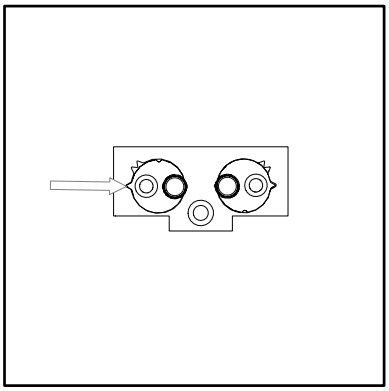

10mm Glass

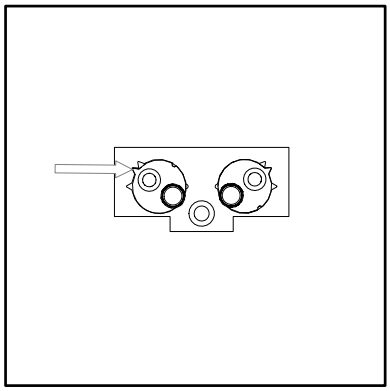

12mm Glass

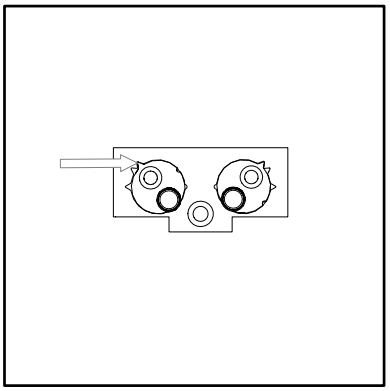

4. DOOR INSTALLATION

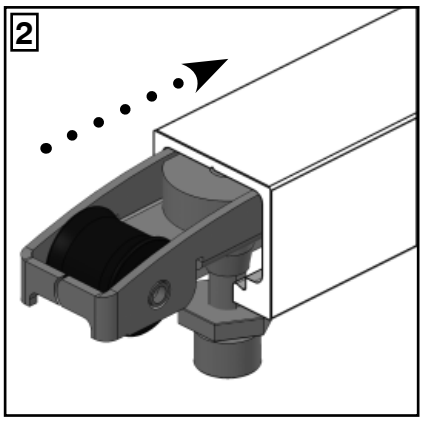

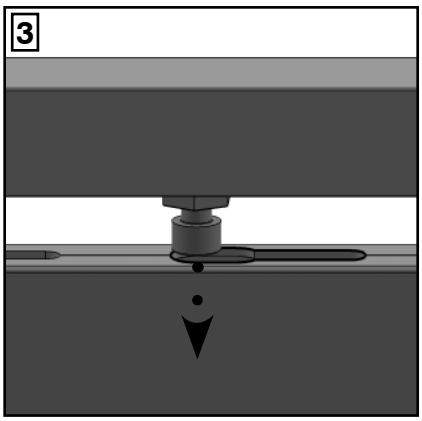

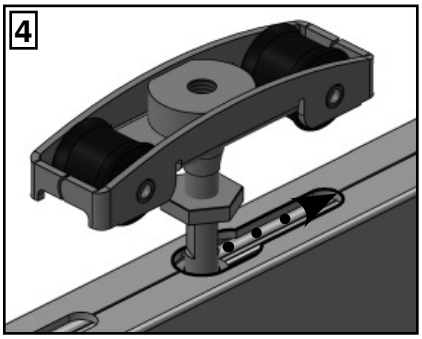

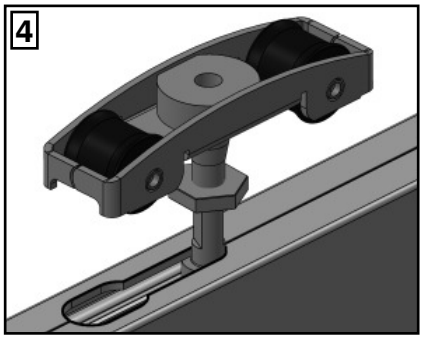

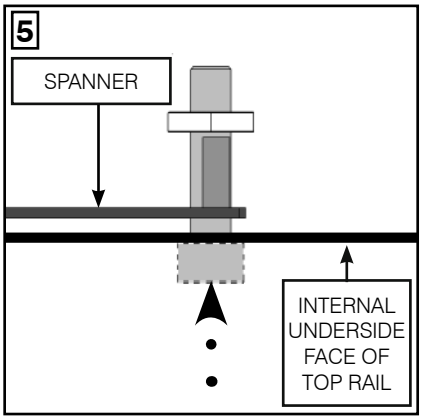

1. Assemble the trolley as pictured, screwing the bolt up into the trolley.

2. Slide both trolleys into the top rail at the front and back.

3. Pack the door (raise it up) so the top rail is just below the bolt and line the bolt up with the large hole in the top rail (use the outer-most hole in the top rail).

4. Unscrew the bolt using the spanner provided until the bolt head is fully inside the rail slot and slide it across into the smaller section of the top rail hole.

5. Screw the bolt upwards so it is tight on the underside of the top rail.

6. Repeat this process for the other trolley.

7. Remove the packing material you placed under the door so it now hangs free.

8. Adjust the bolts using the spanner to ensure the door is level and the bottom edge is **8 - 12mm** from the floor.

9. Screw the locking nuts down to lock everything in place with the large spanner provided.

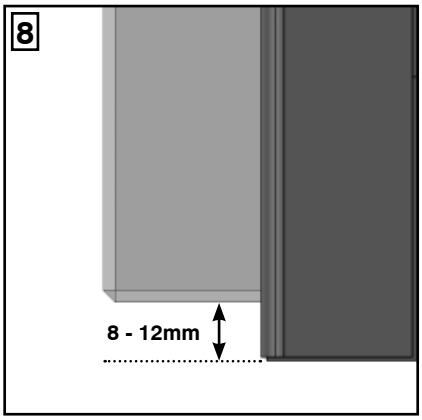

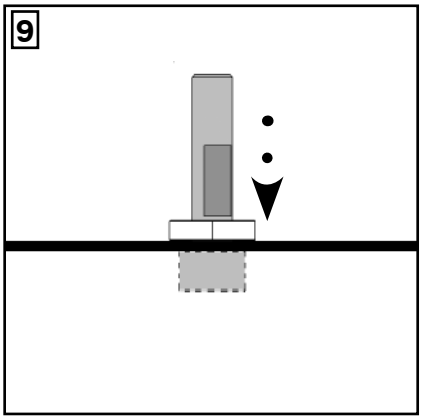

5. TROLLEY CATCHES AND VALANCE END CAPPING

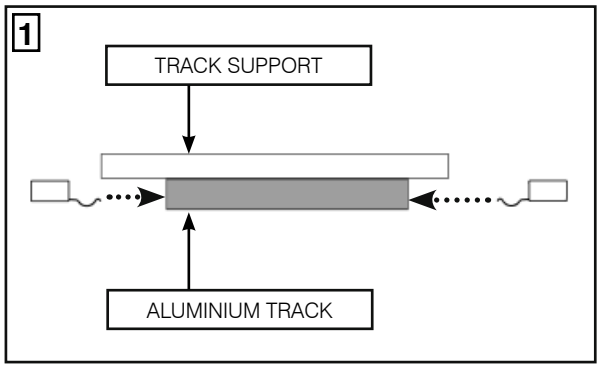

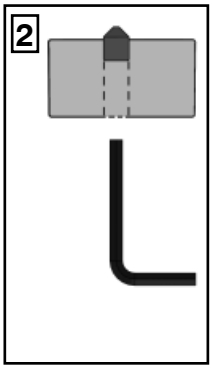

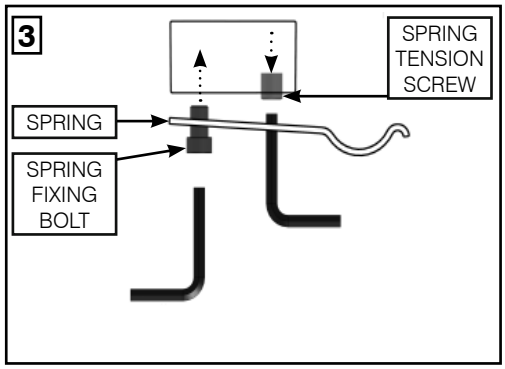

1. Place trolley catches in front and back of aluminium track.

2. Fix trolley catches in required positions within the aluminium track by removing the spring giving access to the centre hole locking grub screw. A 3mm allen key is required.

3. Replace the spring and adjust the clamping bolt to the desired tension to hold the trollies in place using an M5 allen key.

4. Install capping plate to end of valance using small self tapping screws provided - a second end cap is available on request if back of valance is exposed.

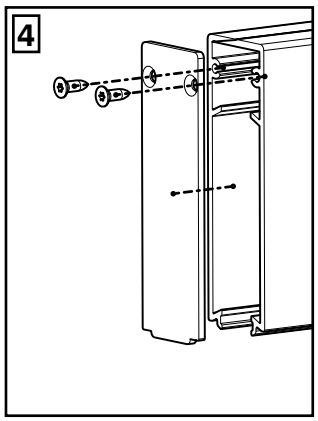

PORTMAN

GLASS DRILLING DETAILS FOR PG926 & PG1500

Please Note: 50mm Diameter hole only for optional P7950 and P7951 flush pulls

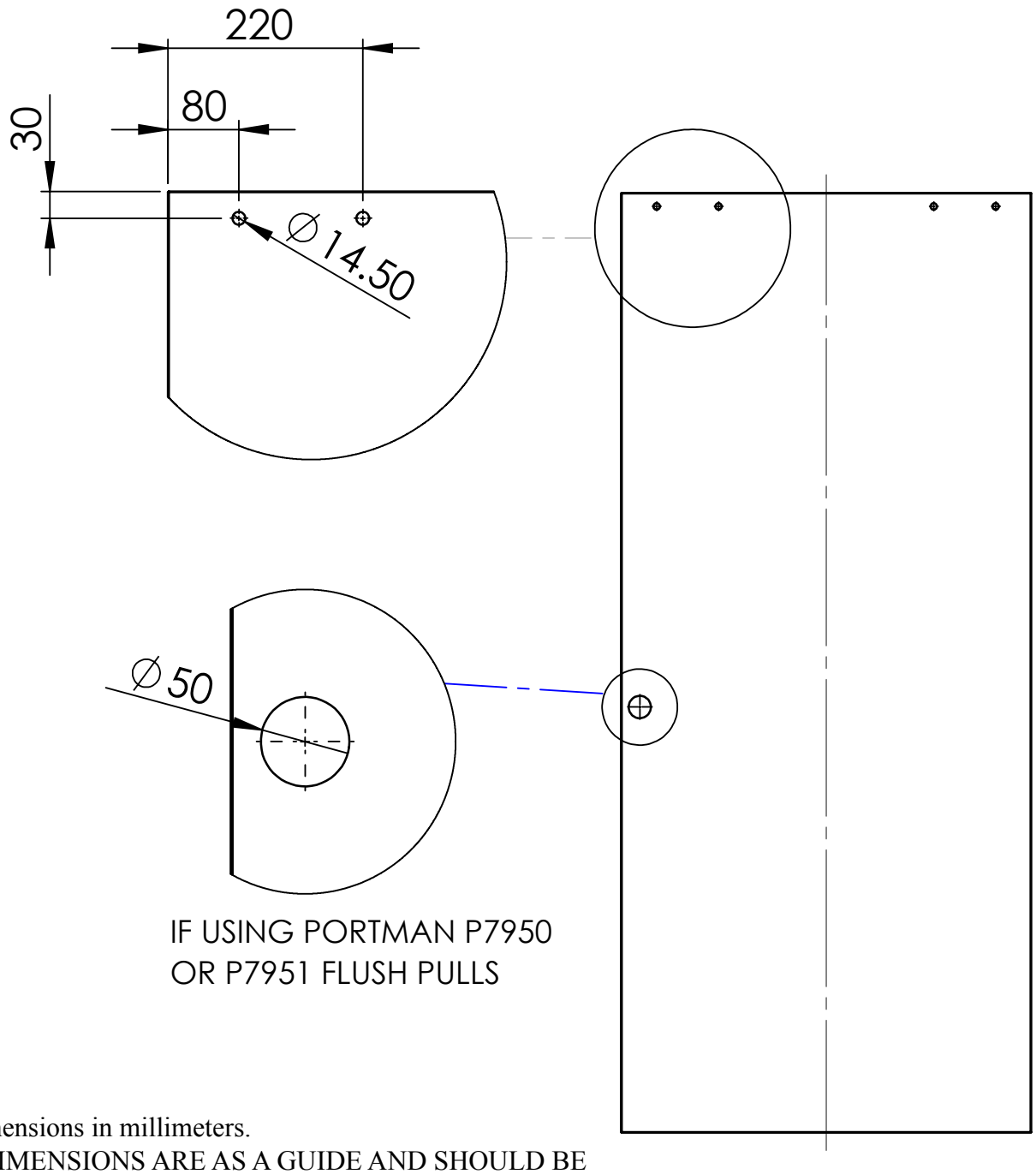

All dimensions in millimeters.
ALL DIMENSIONS ARE AS A GUIDE AND SHOULD BE CHECKED WITH THE GLASS DOOR MANUFACTURER.

NOTE; A NARROW STRESS RELIEF SLOT MAY BE RQUIRED FROM THE RIM OF THE HOLES TO THE TOP EDGE WITH SOME GLASS TYPES. CHECK WITH GLASS DOOR MANUFACTURER.